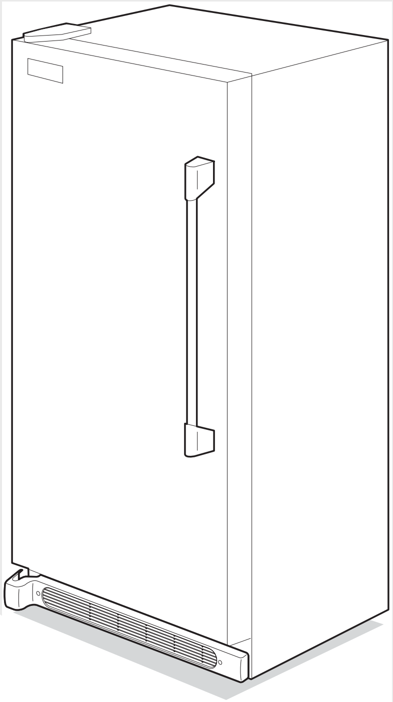

Electrolux

# Factory Parts Catalog

| Product No. | E32AF75FPS0 |
|---|---|
| Series | Icon |
| Color | Stainless/steel |
| Volts | 115 |
| Wiring Diagram | 297115400 |
| Owner's Guide | 297122900 |
| Market | North America |
| Energy Guide | 216910405 |

Electrolux

Electrolux Major Appliances
North & Latin America
P.O. BOX 212378
AUGUSTA, GA 30917

Publication No.
**5995479473**
07/04/25
(EN/SERVICE/MLR)
365

## UPRIGHT FREEZER W/ICE MAKER

Model No.
E32AF75FPS

Copyright © 2007 Electrolux Home Products, Inc.
All rights reserved.

## DOOR

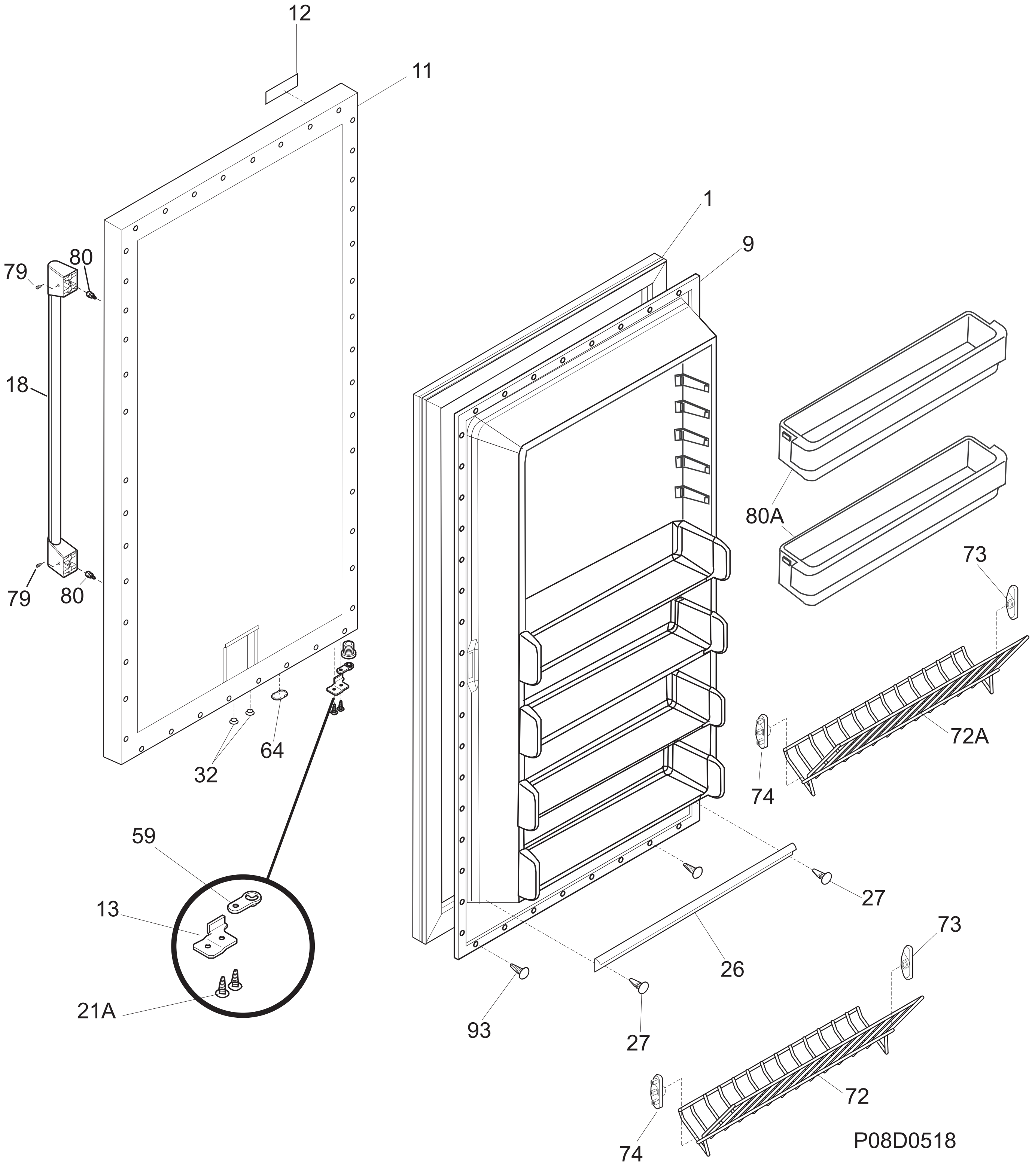
P08D0518

## DOOR

| POS. NO | PART NO. | DESCRIPTION |
|---|---|---|
| 1 | 216522311 | Gasket-door, black |
| 9 | 216527902 | Panel-inner door, frzr |
| 11 | 216526572 | Panel-outer door, stainless steel, LH |
| 12 | 241603101 | Label-nameplate |
| 13 | 216974400 | Door Stop |
| 18 | 241637912 | Handle Assembly, stainless, w/endcaps |
| 18* | 241601001 | Wrench, allen |
| 21A | 5303271077 | Screw, flat head, #1/4-20, door stop/hng |
| 26 | 216524200 | Gasket, secondary |
| 27 | 5303212828 | Clip, panel mtg |
| 27* | 5304406520 | Clip, panel mtg kit, (40) |
| 32 | 5309950074 | Valve, breather |
| 59 | 216974500 | Bearing, door closer |
| 64 | 216403700 | Plug-button, hole filler, door base |
| 72 | 216514100 | Shelf, tilt out, wire |
| 72A | 216580600 | Shelf, tiltout, short 32, wire, (2) |
| 73 | 216513900 | End Cap, shelf, LH, tilt-out |
| 74 | 216514000 | End Cap, shelf, RH, tilt-out |
| 79 | 218755406 | Screw-set, 10-32 x 0.375 |
| 80 | 218755503 | Screw-shoulder, #10 AB, handle mounting |
| 80A | 216514300 | Bin-door, adjustable, (2) |
| 93 | 5303161215 | Screw, ph truss head, 8-18AB x 0.500 |

# CABINET

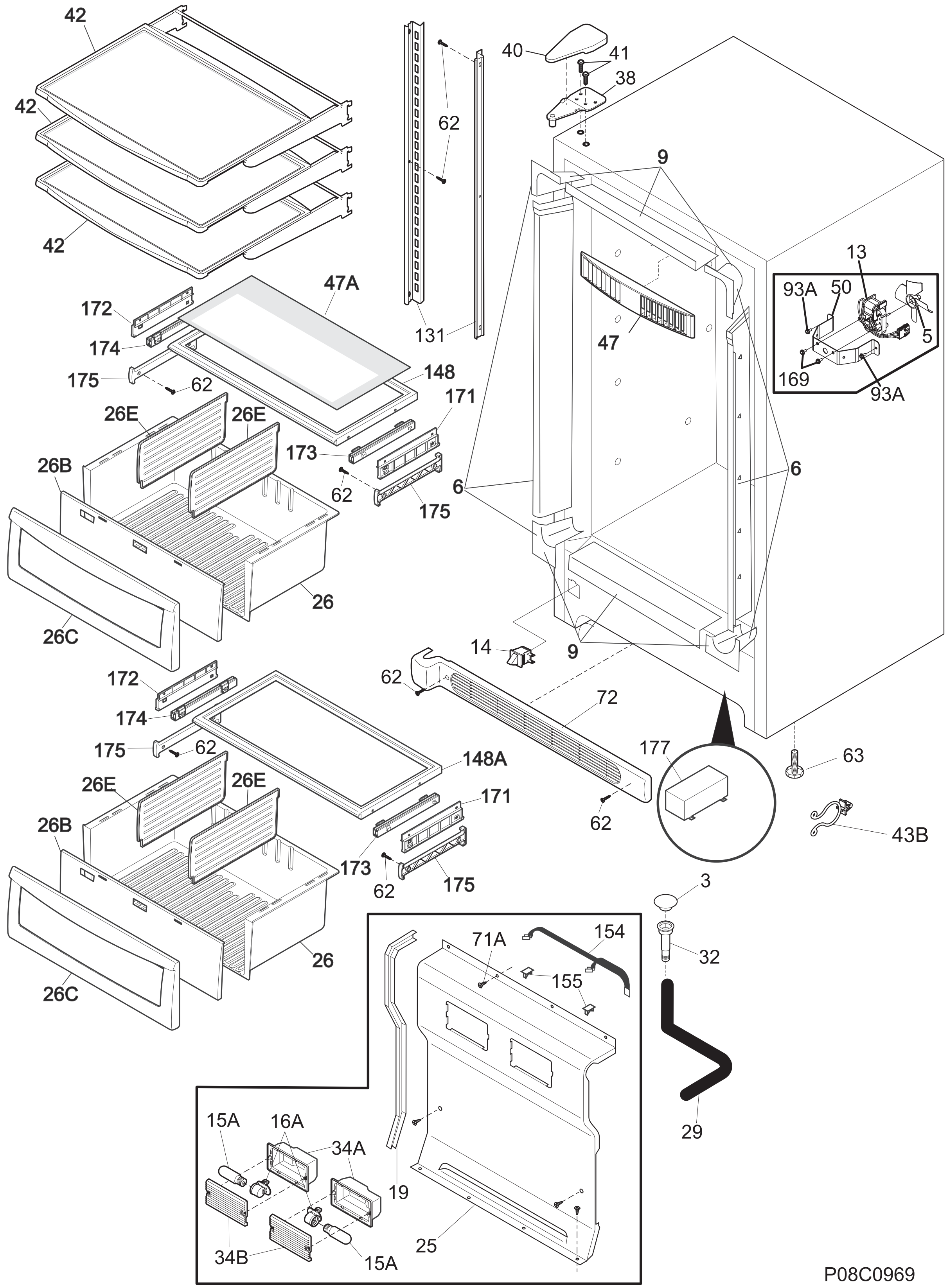
P08C0969

## CABINET

| POS. NO | PART NO. | DESCRIPTION |
|---|---|---|
| 3 | 216503100 | Screen-drain |
| 5 # | 216325600 | Fan Blade |
| 6 | 216604200 | Breaker Kit w/corners |
| 9 | 216603300 | Breaker Kit w/corners, 32", top or bottom |
| 13 # | 216934100 | Motor, fan, 115 V |
| 14 | 216922800 | Switch, light/lamp, ramp |
| 15A | 297048600 | Light Bulb/Lamp, short |
| 16A | 216817600 | Socket, light/lamp, 25 W |
| 19 | 216204902 | Gasket-evap cover |
| 25 | 297099204 | Cover-evaporator |
| 26 | 297091600 | Case-crisper, shallow |
| 26B | 297091801 | Panel, crisper window |
| 26C | 297091704 | Panel, crisper front |
| 26E | 297099400 | Divider-crisper, shallow |
| 29 | 216313501 | Hose-drain |
| 32 | 5308005500 | Drain |
| 34A | 297053100 | Shield-light, LH |
| 34A | 297053101 | Shield-light, RH |
| 34B | 297053200 | Lens, light |
| 38 | 216939100 | Hinge-upper |
| 40 | 216809002 | Cover-hinge |
| 41 | 216936800 | Screw-hinge, 12-24x.700 HWH |
| 42 | 297108901 | Shelf-sliding |
| 43B | 297048400 | Clip |
| 47 | 297133000 | Baffle-plate |
| 47A | 297102700 | Insert-pan cover, glass |
| 50 | 216394000 | Bracket, fan motor mount |
| 62 | 131420300 | Screw, cr truss head, 8-18AB x 0.750 |
| 63 | 216396900 | Screw, leveling foot, plastic, adjustable |
| 71A | 5304416289 | Screw, ph truss head, 8-18AB x 0.47, EVAP PANEL |
| 72 | 297036900 | Grille/Kickplate, 32", white |
| 93A | 216629600 | Screw, hex washer head, 10-16 x 0.500, tapping |
| 131 | 218233301 | Channel-shelf mtg, side, (2) |
| 148 | 297092500 | Frame-crisper cover, upper |
| 148A | 297092501 | Frame-crisper cover, shallow, lower |
| 154 | 297053000 | Wire, jumper |
| 155 | 5303313703 | Clip, (2) |
| 169 | 216912400 | Screw, hex washer head, #8-32 x .500, bracket fan mtr, (2) |
| 171 | 297092700 | Bracket, crisper cover, RH |
| 172 | 297092701 | Bracket, crisper cover, LH |
| 173 | 297107600 | Slide, crisper, RH |
| 174 | 297107601 | Slide, crisper, LH |
| 175 | 297099500 | Support-crisper |
| 177 | 297116000 | Electronics, theater lgt |
| * | 216910405 | Energy Guide |
| * | 297001704 | Insulation, 24", drain tube |
| * | 297114600 | Instructions, installation, icemaker |

# SYSTEM

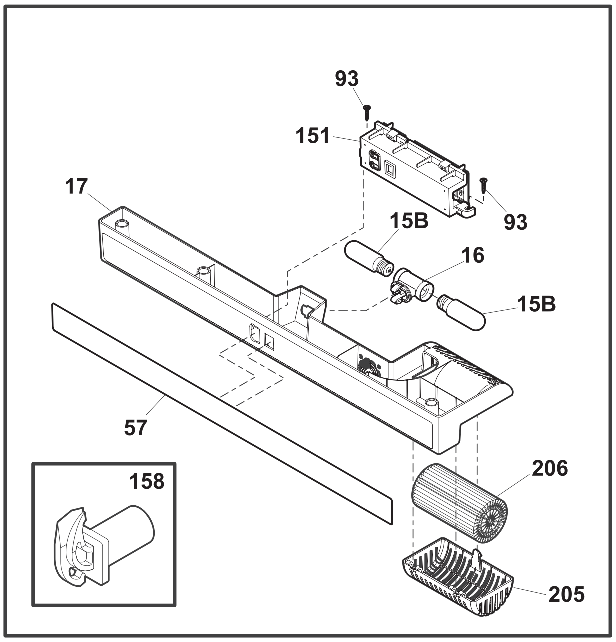
93
151
17
15B
93
16
15B
57
158
206
205

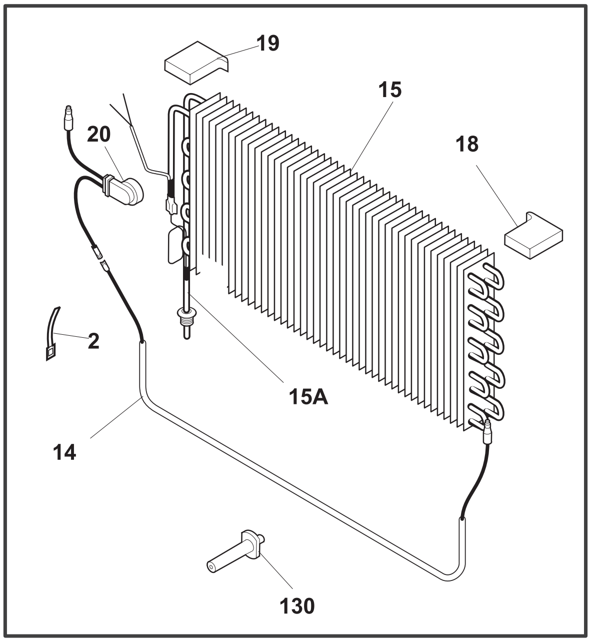
19
15
20
18
2
15A
14
130

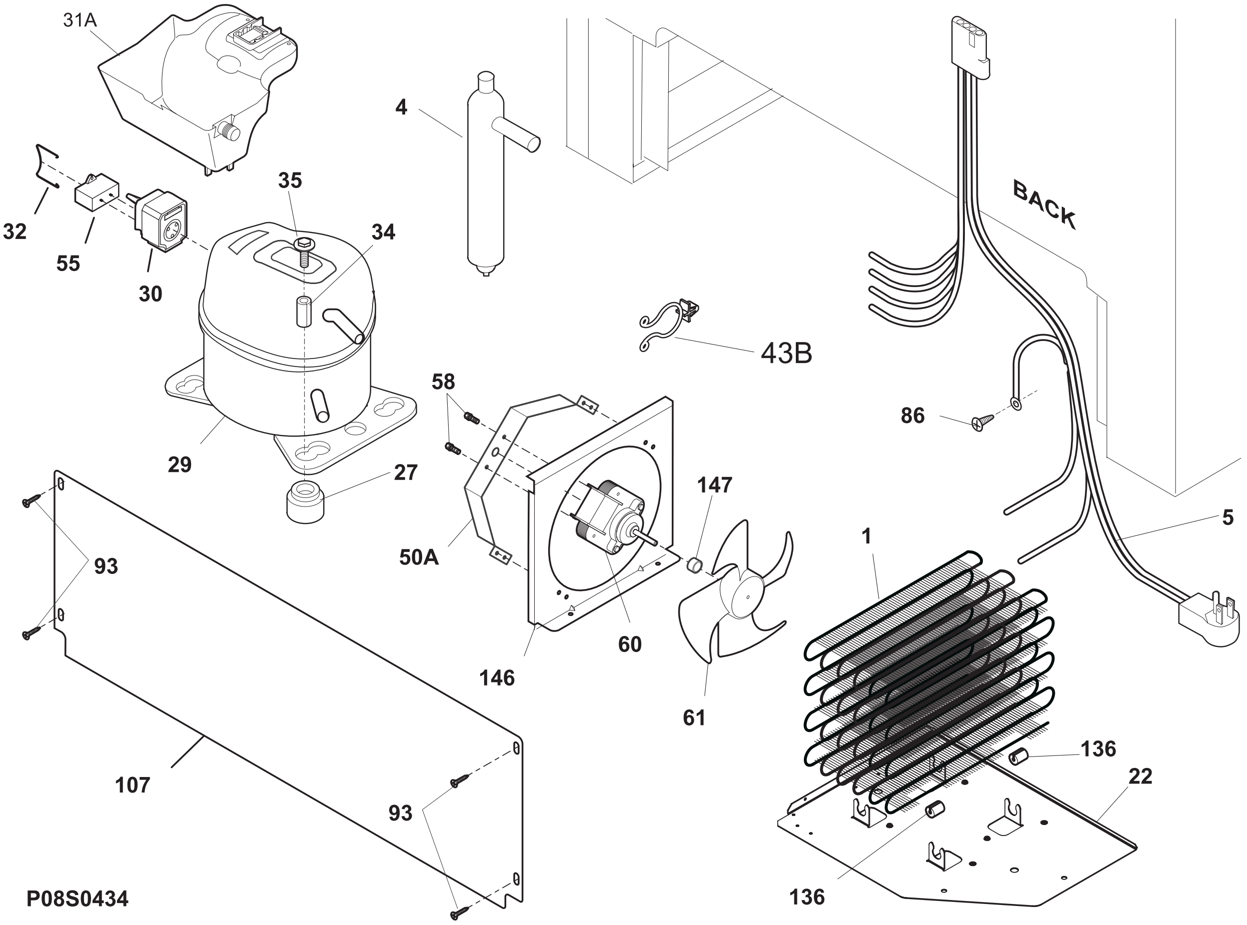
31A
4
35
34
32
55
30
BACK
43B
86
58
29
27
147
5
1
93
50A
60
146
61
107
136
22
93
136

P08S0434

## SYSTEM

| POS. NO | PART NO. | DESCRIPTION |
|---|---|---|
| 1 # | 5300083897 | Condenser |
| 2 | 5308000110 | Strap-evap/heater, aluminum, (2) |
| 4 # | 216938600 | Drier-filter |
| 5 # | 297122600 | Harness-main |
| 14 | 216730700 | Heater-defrost |
| 15 # | 216997300 | Evaporator |
| 15A# | 216783200 | Heat Exchanger, suct/cap tube |
| 15B | 297114000 | Light Bulb, short, blue tint, 40W |
| 16 | 241507803 | Socket-light |
| * | 297108000 | Jumper-wire, electronic w/lt |
| 17 | 297110300 | Box-control, front |
| 17* | 131823400 | Screw, 8-18 x 2.00 |
| 17* | 297112600 | Sleeve-control box, (3) |
| 18 | 297078700 | Insulator-evap, styrofoam |
| 19 | 297078800 | Insulator-evap, styrofoam |
| 20 | 216872200 | Thermostat, defrost |
| 22 | 216970300 | Base, condenser |
| 27 | 5308002681 | Grommet, compressor |
| 29 # | 297003000 | Compressor, kit w/grommets, & welded clip, w/o electricals |
| 30 # | 241527803 | Starter-TSD |
| 31A | 216994100 | Pan-drain |
| 32 | 241544101 | Clamp, elec cont mtg, compressor, bale wire |
| 34 | 5306594529 | Sleeve-compressor |
| 35 | 5303272328 | Screw, Ind hex sems, 1/4-28 unfx, compressor |
| 43B | 297048400 | Clip |
| 50A | 240524001 | Bracket, fan motor mount |
| 55 | 218909915 | Capacitor, run, 220 VAC, 15 microfarad |
| 57 | 297110801 | Overlay-control box |
| 58 | 218897002 | Screw, hex washer head, 8-32 x 0.375 |
| 60 | 240525402 | Motor, condensor fan |
| 61 # | 240524101 | Fan Blade, galv steel, condenser fan |
| 86 | 216036600 | Screw, ph washer head, 8-32CA x 0.500, thread forming |
| 93 | 5303161215 | Screw, ph truss head, 8-18AB x 0.500 |
| 107 | 297001900 | Shield, compressor, Compartment |
| 130 | 216486800 | Support, evaporator mtg |
| 136 | 240405201 | Grommet, rubber, black, cond tube/wire |
| 146 | 216970200 | Shroud-fan orfice |
| 146* | 216337700 | Screw, hex washer head, 10-24 x 0.500 |
| 147 | 240560001 | Ring-compression |
| 151# | 297112403 | Electronic control, assy |
| 158 | 297111000 | Standoff, control box, (3) |
| 205 | 297108500 | Cap-air filter |
| 206 | 241504902 | Filter-air |
| * | 216502500 | Sleeve, suction line |
| * | 297014500 | Plug-suction line |
| * | 297102800 | Spacer-tube |

# ICE MAKER

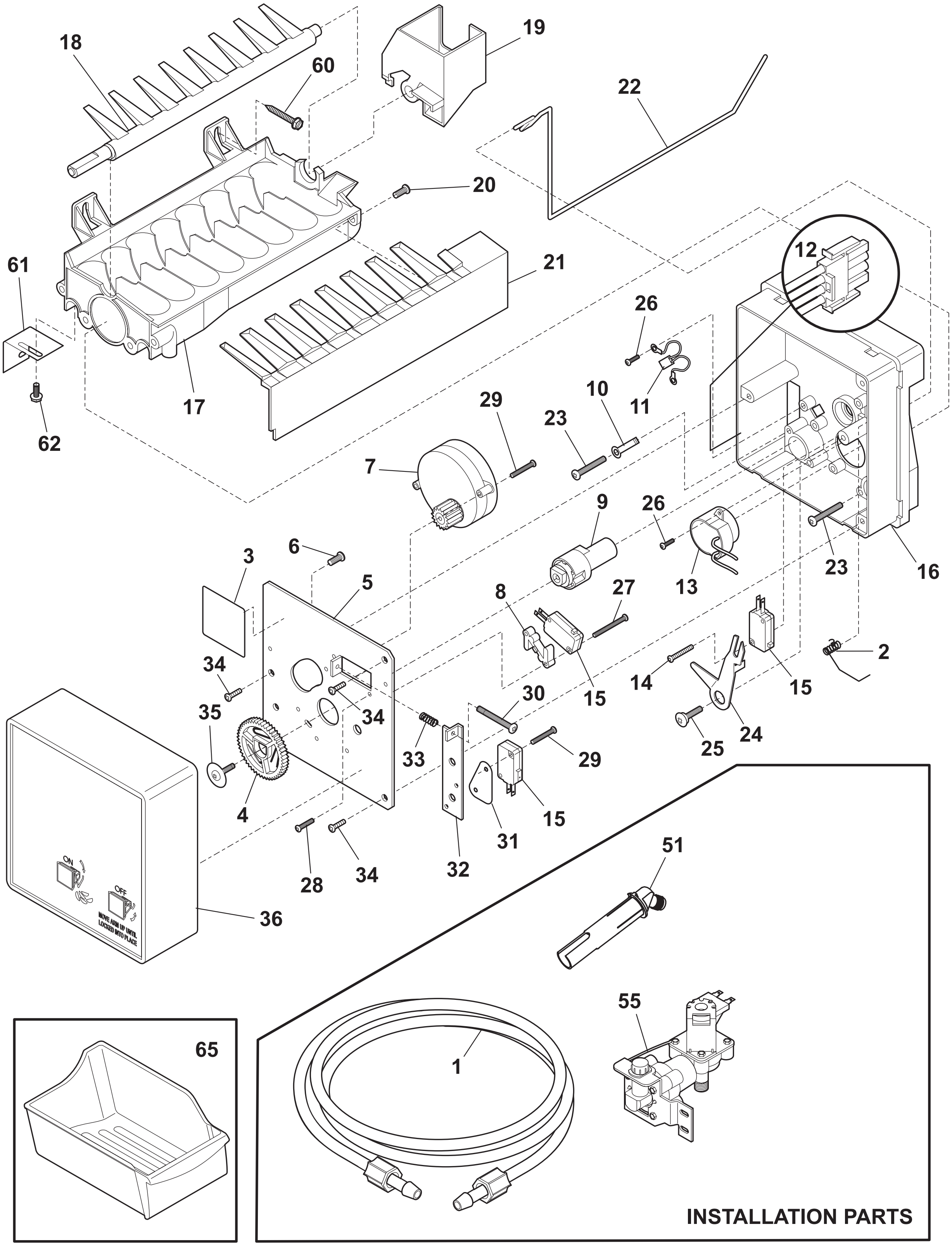
18
19
60
22
20
61
21
12
26
17
62
29
10
11
23
7
9
26
23
16
3
6
5
13
8
27
2
34
15
14
15
30
35
34
24
33
29
25
4
15
31
51
28
34
32
36
ON
OFF
MOVE ARM UP UNTIL LOCKED INTO PLACE
55
65
1
INSTALLATION PARTS

P08ICE03

## ICE MAKER

| POS. NO | PART NO. | DESCRIPTION |
|---|---|---|
| 1 | 297044900 | Tube-water inlet, inlet valve, to ice maker |
| 1* | 240561701 | Seal-water inlet, inlet valve, to ice maker |
| 2 | 5304420650 | Spring, shut-off arm |
| 3 | 3206299 | Label, ID plate |
| 4 | 3206301 | Gear |
| 5 | 3206303 | Plate-mounting |
| 6 | 3206305 | Screw-ground wire, 8-32 x 0.250 |
| 7 # | 3206306 | Motor-ice maker |
| 8 | 3206312 | Spacer-hold switch |
| 9 | 3206313 | Cam |
| 10 | 3206315 | Clamp |
| 11 # | 3206319 | Thermal Cutoff, ICE MAKER, complete assy |
| 12 # | 5304420651 | Wiring Harness, ICE MAKER, internal, with plug |
| 13 # | 3206322 | Thermostat Assy, ICE MAKER |
| 14 | 5304420652 | Screw, 4 x 0.750, switch mtg. |
| 15 # | 3206324 | Switch, (3) |
| 16 | 5304420653 | Support, phenolic |
| 17 # | 5303320545 | Mold-ice maker, radius cube, with heater |
| 18 | 3206328 | Ejector-ice |
| 19 | 3206330 | Bearing & Inlet |
| 20 | 5304408581 | Screw, 8-32 x 0.375 |
| 21 | 3206332 | Ice Stripper |
| 22 | 3206333 | Shut-off Arm |
| 23 | 5304408582 | Screw, 8-32 x 0.875, mold-to-support, (3) |
| 24 | 3206335 | Lever Arm |
| 25 | 3206336 | Screw, 8-18 x 0.562, lever arm/sprt |
| 26 | 5304420654 | Screw-thermo/sprt, 4-24 x 0.375, (4) |
| 27 | 3206338 | Screw, 4-40 x 1.000, hold switch mtg, (2) |
| 28 | 3206339 | Screw-timing stop, 4-40 x 0.375 |
| 29 | 3206323 | Screw, 4-24 x 0.750, (6) |
| 30 | 3206341 | Screw-timing adj, 8-32 x 1.000 |
| 31 | 3206342 | Insulator |
| 32 | 3206343 | Plate-valve switch |
| 33 | 5304408583 | Spring-timing adj |
| 34 | 5304420655 | Screw, plazscrew, 8-10, (3) |
| 35 | 5304408585 | Screw |
| 36 | 3206347 | Cover-ice maker |
| 45 | 5303161215 | Screw, ph truss head, 8-18AB x 0.500 |
| 51 | 216887500 | Tube, water, ICE MAKER |
| 55 # | 240519601 | Valve-water, single solenoid, 60 Hz, 105/120 V |
| 60 | 218362500 | Screw, hex washer head, 8-18AB x 1.250, spacer, (2) |
| 61 | 218721500 | Bracket-leveling, ICE MAKER |
| 62 | 218737900 | Screw-IM brkt mtg, hex washer head, 8-32D x 0.375 |
| 65 | 240385201 | Container, ice bin |
| * | 240352409 | Ice Maker, radius cube, 115 V, no instl parts |
| * | 297114101 | Adapter-water supply, nut & sleeve, compression ftg |
| * |  | IM501 Ice Maker Kit-Freezer |

# Functional Parts
* Non-Illustrated Parts

Electrolux

# Factory Parts Catalog

| | |
|---|---|
| Product No. | E32AR75FPS0 |
| Series | Icon |
| Color | Stainless/steel |
| Volts | 115 |
| Wiring Diagram | 297115300 |
| Owner's Guide | 297122800 |
| Market | North America |
| Energy Guide | 297115901 |

Electrolux

Electrolux Major Appliances
North & Latin America
P.O. BOX 212378
AUGUSTA, GA 30917

Publication No.
**5995479135**
07/04/26
(EN/SERVICE/MLR)
365

## REFRIGERATOR

## Model No.
## E32AR75FPS

Copyright © 2007 Electrolux Home Products, Inc.
All rights reserved.

# DOOR

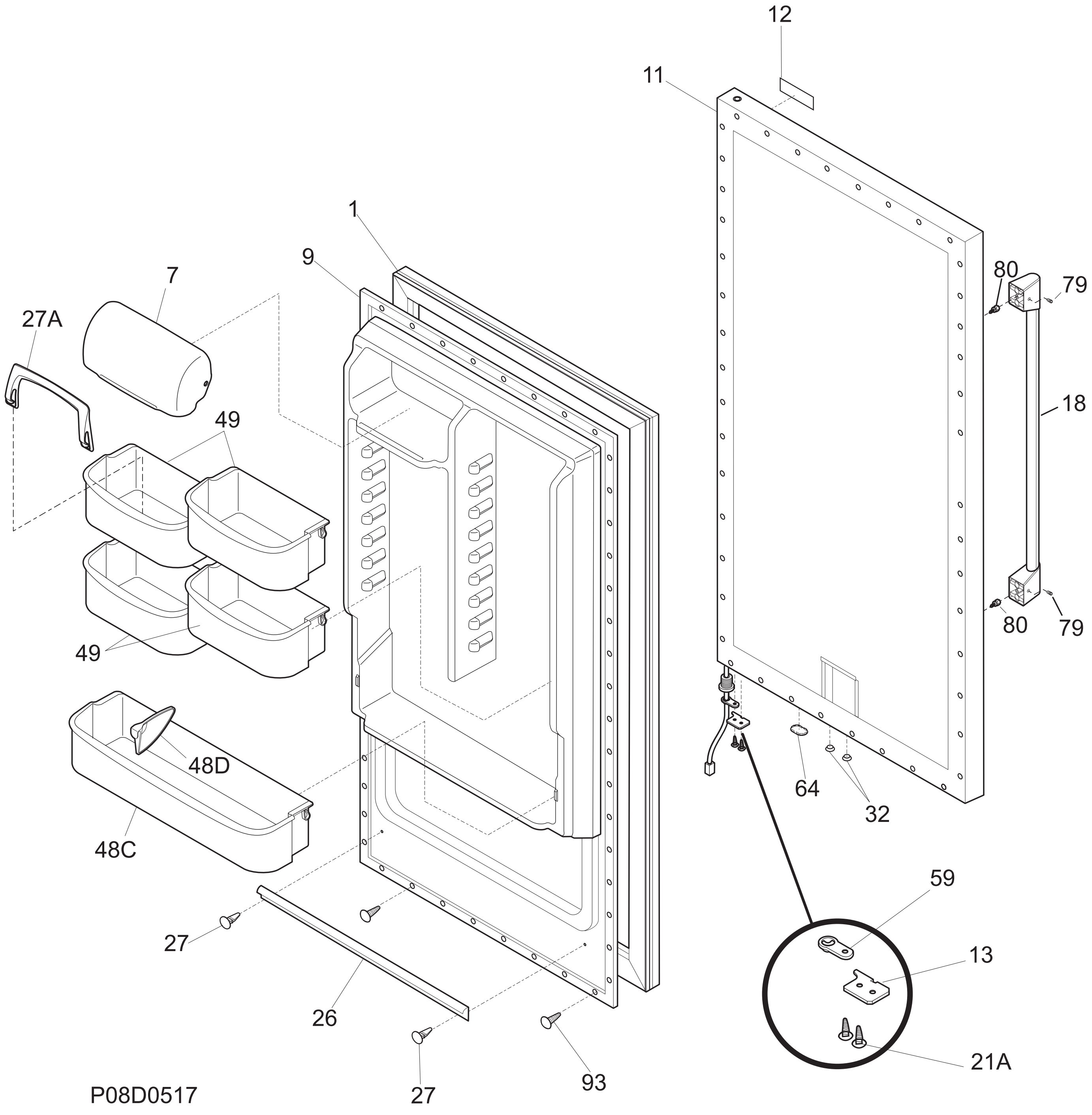
P08D0517